OCZ 300.405

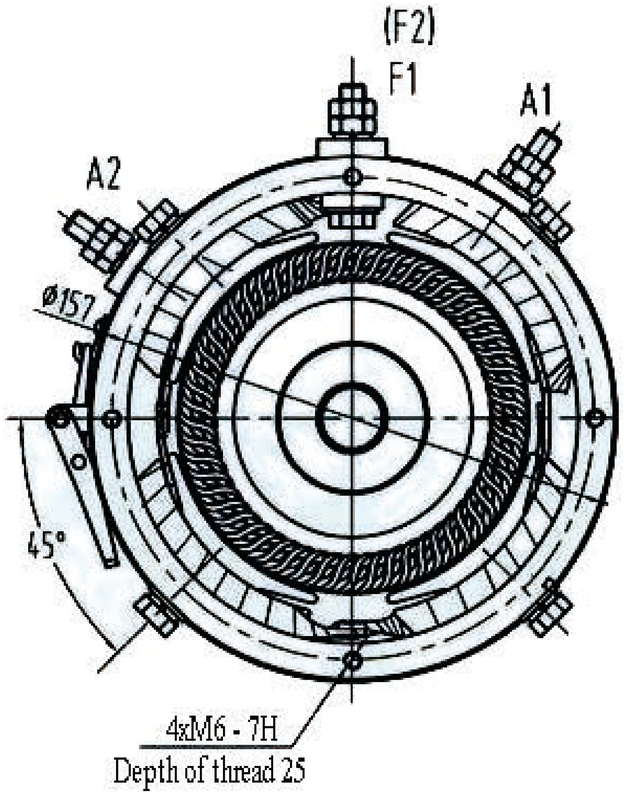

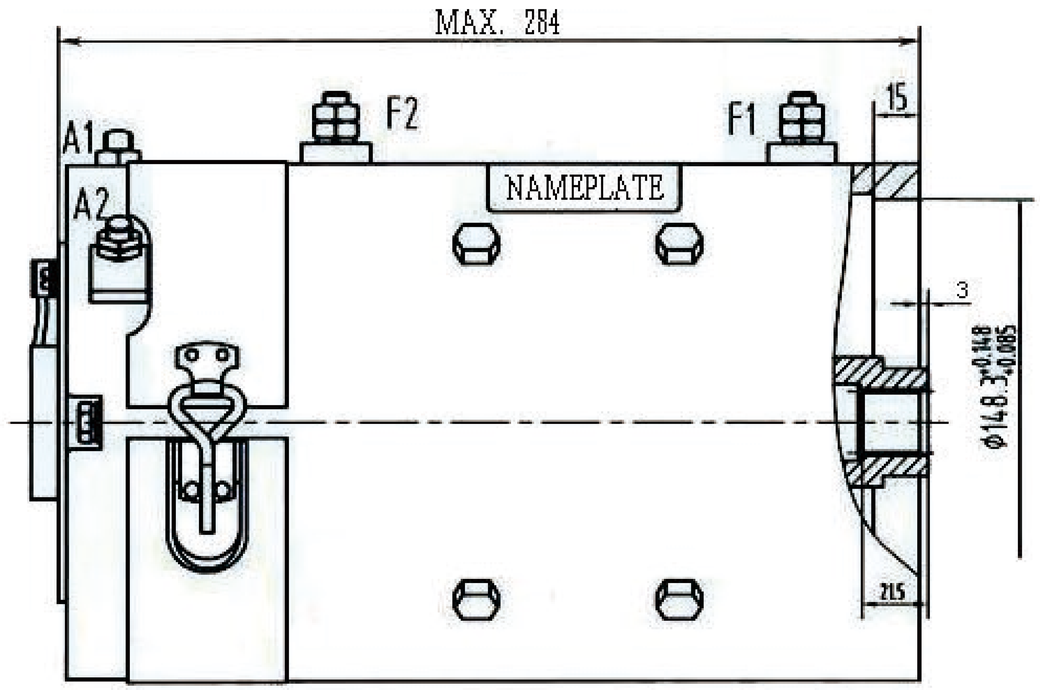

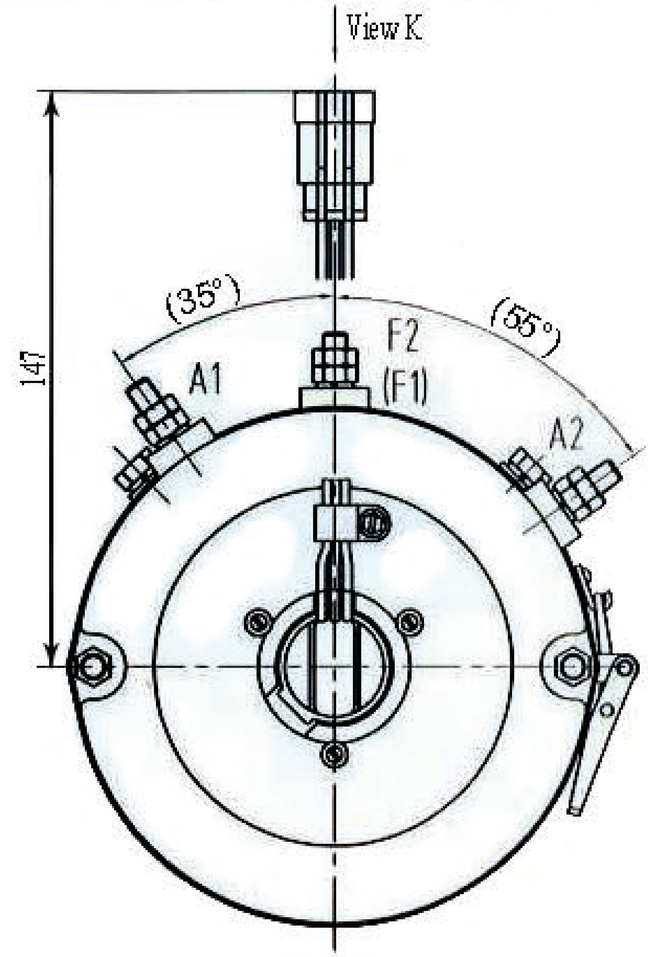

View K
4.5 : 1

INVOLUTE SPLINE PARAMETERS

Name		Code	Value
Dedendum Type			Round
Matching Type			Parallel Shafts
Diametral Pitch		P	24 / 48
Teeth Number		Z	19
Pressure Angle		θ	45°
Angular Diameter		D	Ø20.108418
Base Circle Diameter		Db	Ø14.218666
Max. Diameter		Dei	Ø21.59 - Ø21.8186
Min. Diameter		Dii	Ø19.485 - Ø19.518
Form Diameter			Ø21.3106
Tolerance Grade & Fitting Type			5H
Gear tooth width	Max.	E	1.94056
	Min.		1.87452
Measuring Value Between Needles			Ø17.05356
Gauge Needle Diameter			2.032

KEY CHARACTERISTICS

1. MOTOR MODEL: XQ-3.8
2. NOMINAL POWER RATE: 3.675KW / 4KW
3. NOMINAL VOLTAGE: 48 V
4. 1 HOUR ARMATURE CURRENT: 88A / 96A
5. RATED SPEED: 3600 / 3200 RPM
6. EXCITATION MODE: SEPEX
7. 1 HOUR FIELD CURRENT: 7.5 A / 9A
8. INSULATION: CLASS H
9. DUTY: 60MIN
10. INGRESS PROTECTION: IP20

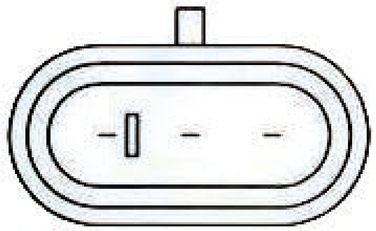

标记	处数	更改文件号		签名	年月日			noco® Outline Diagram
设计			标准化			阶段标记	重量	Scale
校对						S A		1:1.5
审核								www.noco-evco.com
工艺			批准			共 张	第 张	0

XQ-3.8