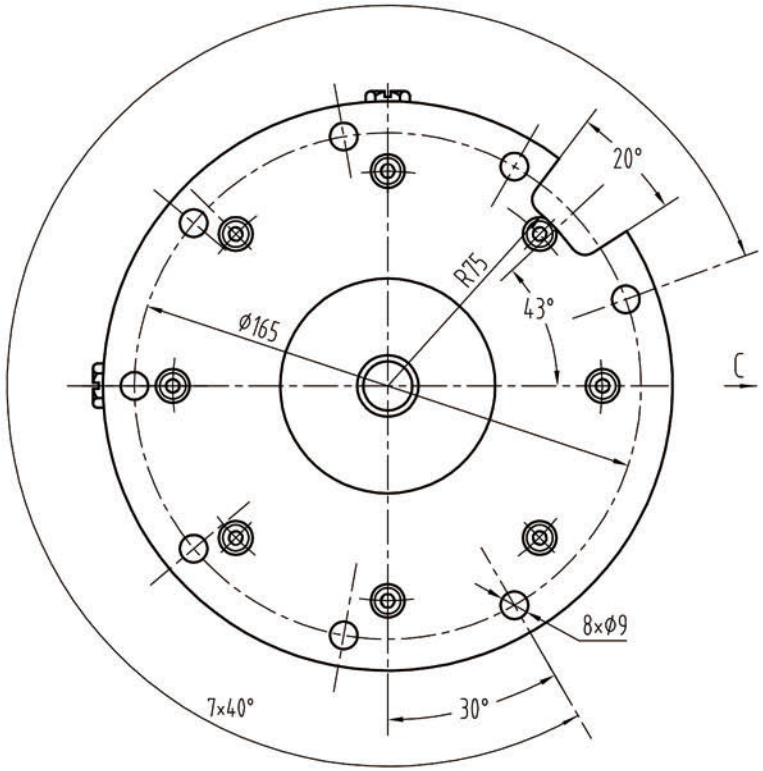

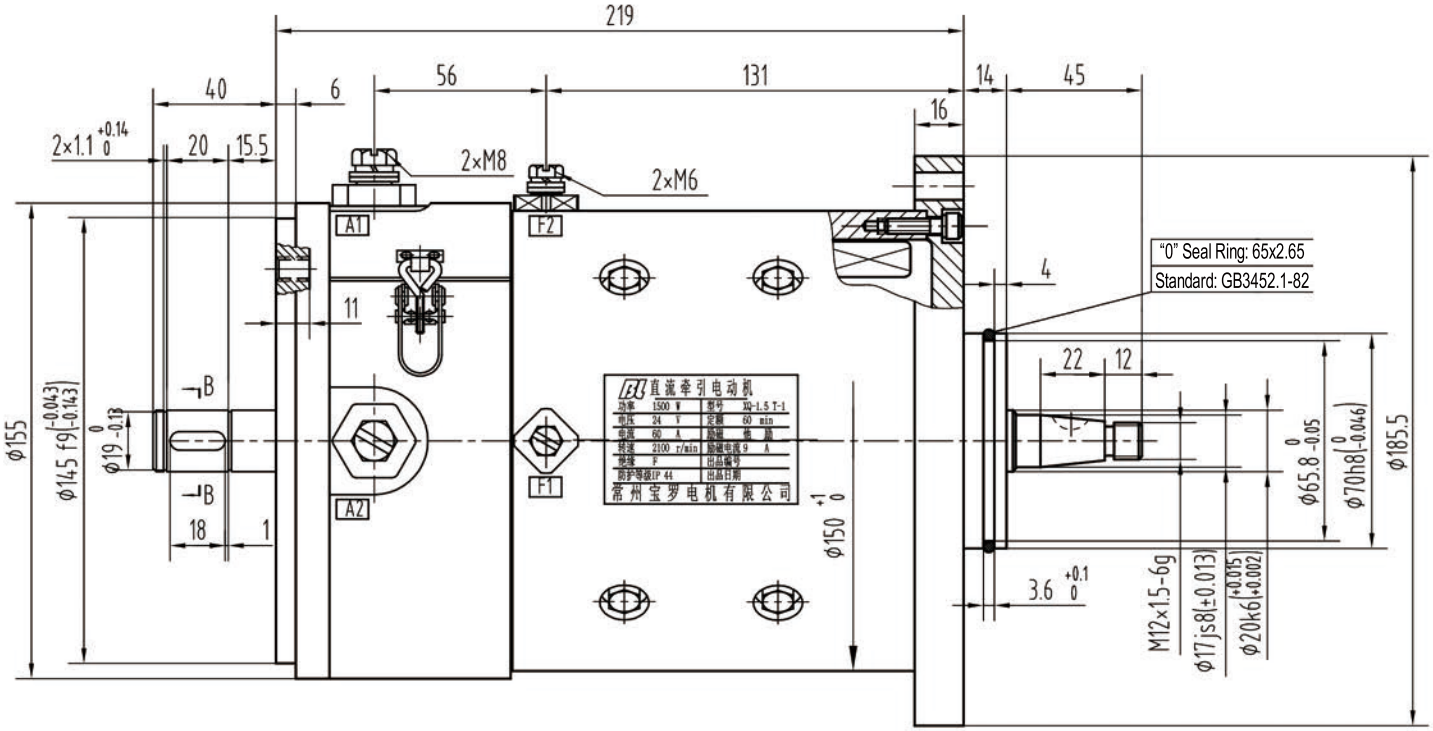

C Direction

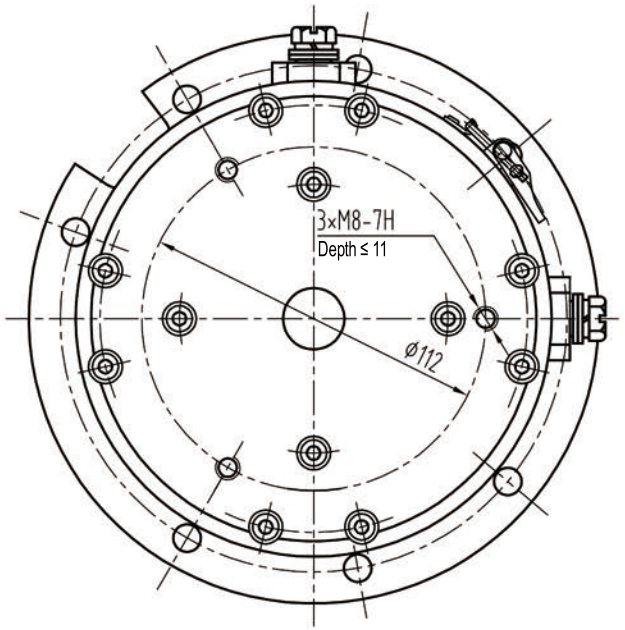

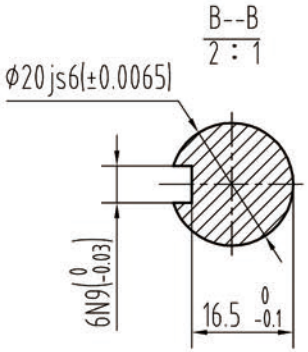

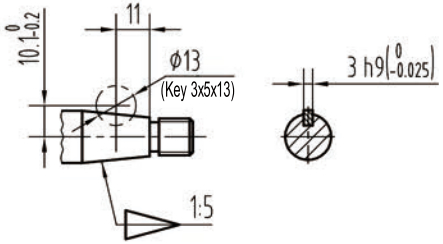

Specificaton:

Power Rate: 1.5kW Duty: 60min
Voltage: 24V Exciting: SepEx
Current: 60A Field Current: 9A
Insulation: Class F
Ingress Protection: IP44
Speed: 2100 rpm
Max. Speed: 3200 rpm
Standard: JB 5335-91
Weight: 19.95kg

XQ-1.5T-1 DC SepEx Motor

https://www.noco-evco.com/